TELECAB

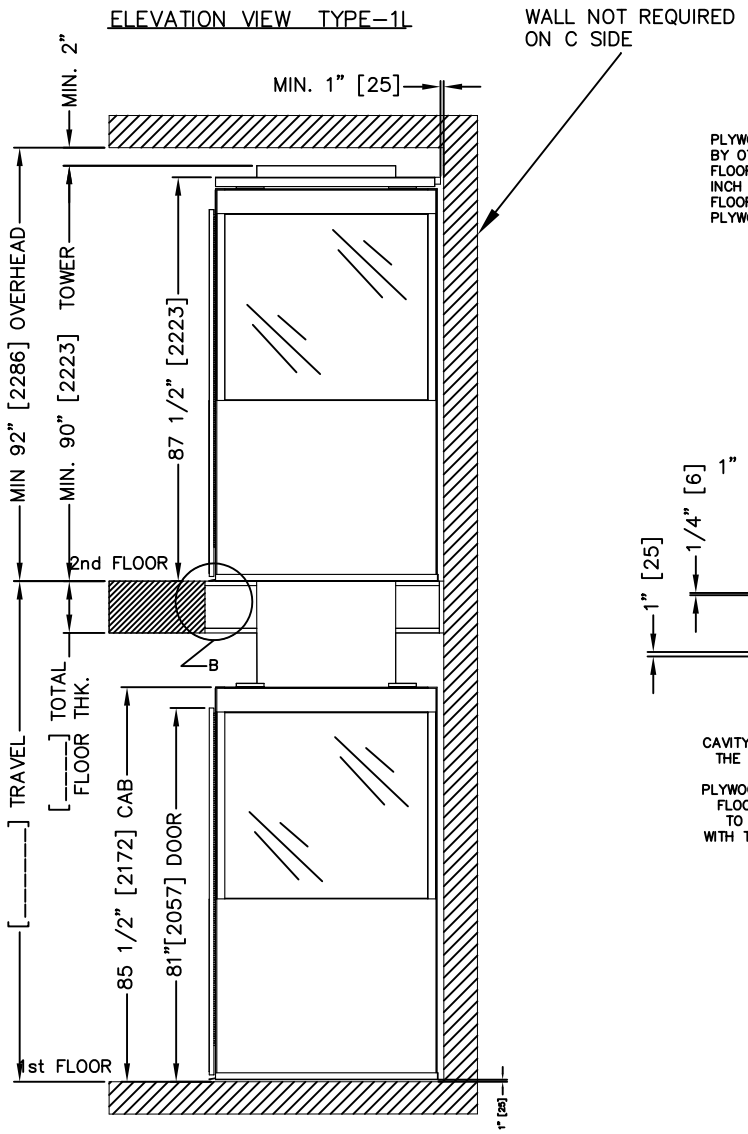

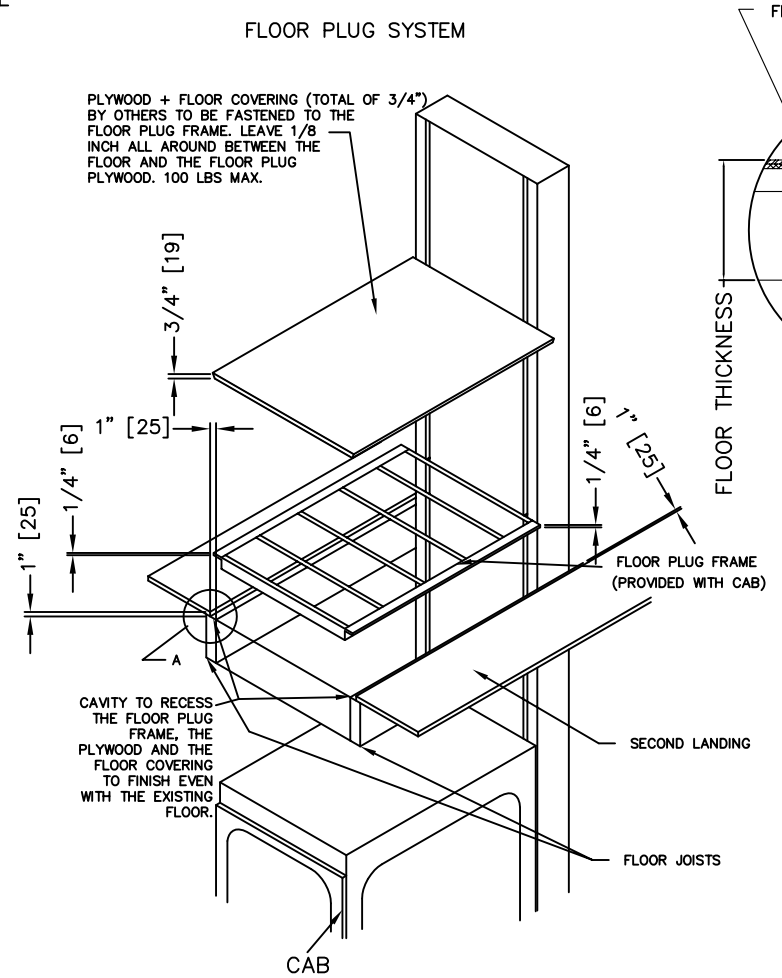

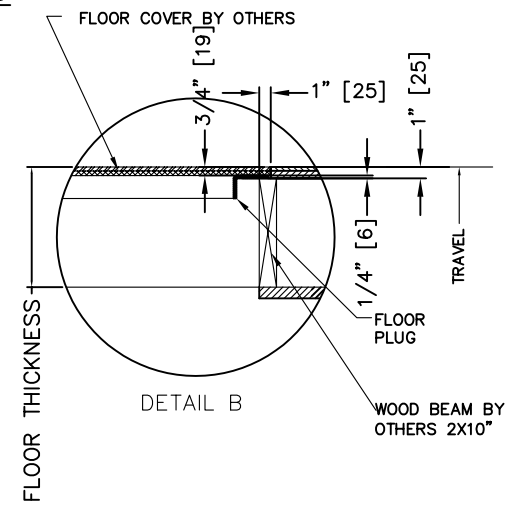

DETAIL B

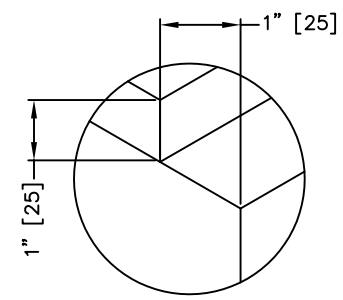

DETAIL A

PROVISIONS BY OTHERS

GENERAL

HOISTWAY – THE HOISTWAY MUST BE DESIGNED AND BUILT IN ACCORDANCE WITH "SAFETY STANDARD FOR PLATFORM LIFTS AND STAIRWAY CHAIRLIFTS" OR "SAFETY CODE FOR ELEVATORS AND ESCALATORS" AND ALL STATE/ PROVINCIALS AND LOCAL CODES.

PLUMB RUNWAY– DUE TO CLOSE RUNNING CLEARANCES OWNER/ AGENT MUST ENSURE THAT HOISTWAY AND PIT (WHERE PROVIDED) ARE LEVEL, PLUMB (–/+ 1/8" (3 mm)) AND SQUARE AND ARE IN ACCORDANCE WITH THE DIMENSIONS ON THESE DRAWINGS.

MINIMUM OVERHEAD CLEARANCE– OWNER/AGENT MUST ENSURE MINIMUM OVERHEAD CLEARANCE IS IN COMPLIANCE WITH CODES.

CONSTRUCTION SITE– OWNER/AGENT TO PROVIDE ALL MASONRY, CARPENTRY AND DRYWALL WORK AS REQUIRED AND SHALL PATCH AND MAKE GOOD (INCLUDING FINISH PAINTING) ALL AREAS WHERE WALLS/FLOORS MAY REQUIRE TO BE CUT, DRILLED OR ALTERED IN ANY WAY TO PERMIT THE PROPER INSTALLATION OF THE LIFT.

DIMENSIONS– CONTRACTOR/CUSTOMER TO VERIFY ALL DIMENSIONS AND REPORT ANY DISCREPANCIES TO OUR OFFICE IMMEDIATELY.

STRUCTURAL

FLOOR/SUPPORT WALL LOADS– STRUCTURAL ENGINEER TO ASSURE THAT BUILDING AND SHAFT WILL SAFELY SUPPORT ALL LOADS IMPOSED BY THE LIFT EQUIPMENT. REFER TO THE LOAD DIAGRAM ON THIS DRAWING.

MAST TO BE SECURELY FASTENED– WHERE REQUIRED THE MAST MUST BE SECURELY FASTENED TO THE STRUCTURAL SUPPORT WALL. REFER TO WALL / FLOOR SUPPORT LOAD DIAGRAM AND WALL LAG DIMENSIONS ON THIS DRAWING.

ELECTRICAL

GENERAL– ELECTRICAL EQUIPMENT AND WIRING TO COMPLY WITH SECTION 38 OF CSA C22.1 (CANADA) OR SECTION 620 OF NEC ANSI/NFPA 70 (USA).

POWER SUPPLY– 120VAC, 20A, 60HZ, 1PH CIRCUIT THROUGH A FUSE DISCONNECT WITH AUXILIARY CONTACT ON MAIN POWER SUPPLY. PROVIDE TWO 18 AWG CONDUCTORS BETWEEN CONTACT AND CONTROLLER.

LIGHTING– LIGHTING OF 100 LX MIN. AT PLATFORM AND LANDINGS. LIGHTING WITH SWITCH AND ELECTRICAL GFCI OUTLET IN HOISTWAY PIT.

CLASSIFICATION	RESIDENTIEL BUILDING
TELECAB USABLE DIM.	32" x 54" x 78"
TELECAB CAPACITY	500 LBS [227 KG]
COLOR (URETHANE FINISH)	☐ WHITE ☐ BEIGE
PLEXIGLASS TINT	☐ BRONZE ☐ CLEAR
CAB DOOR OPERATION	☐ MANUAL ☐ HYDRAULIC DOOR CLOSER ☐ POWER OPERATED
POWER	☐ 110 VAC + 12 VDC DOWN STD ☐ 12 VDC UP + DOWN ☐ 220 VAC/50 HZ
HALL STATION	☐ SURFACE MOUNTED ☐ FLUSH MOUNTED
BEARING WALL	☐ WOOD ☐ CONCRETE
LEVEL SERVED	☐ 2 LEVELS
NUMBER OF OPENING(S)	☐ 1 OPENING
MAX. WORKING PRESSURE	2000 PSI
RELIEF PRESURE	WPx125% MAX
DRIVE SYSTEM	1 TO 2 CHAIN HYDRAULIC
CHAIN	#50, QTY: 2
CONTROLLER	RELAY LOGIC
OPERATION	CONSTANT PRESSURE, ANTI–CREEP FEATURE
FLOOR PLUG	PROVIDED

SAFETY FEATURES

1) CSA CERTIFIED WR500 LOCK
2) UNDER PANEL SAFETY SENSOR
3) EMERGENCY STOP AND ALARM
4) EMERGENCY BATTERY LOWERING
5) EMERGENCY LOWERING
6) FULLY ENCLOSED DRIVE TOWER
7) PRESSURE RELIEF VALVE TO PREVENT PLATFORM OVERLOAD
8) SLACK CHAIN SAFETY DEVICE
9) TELEPHONE IN CAB
10) HALOGEN LIGHT IN CAB
11) NEGATIVE PRESSURE SWITCH

CODE

THIS LIFT IS DESIGNED, MANUFACTURED AND INSTALLED IN ACCORDANCE WITH THE FOLLOWING STANDARDS :
ASME A17.1 PART V 2007–08, CSA B44 2007–08, NEC AND IBC.
SAVARIA'S RESPONSABILITY IS LIMITED TO THE DESIGN AND MANUFACTURING REQUIREMENTS OF THESE CODES AND EXCLUDES REQUIREMENTS RELEVANT TO THE INSTALLATION AND INSTALLATION SITE.

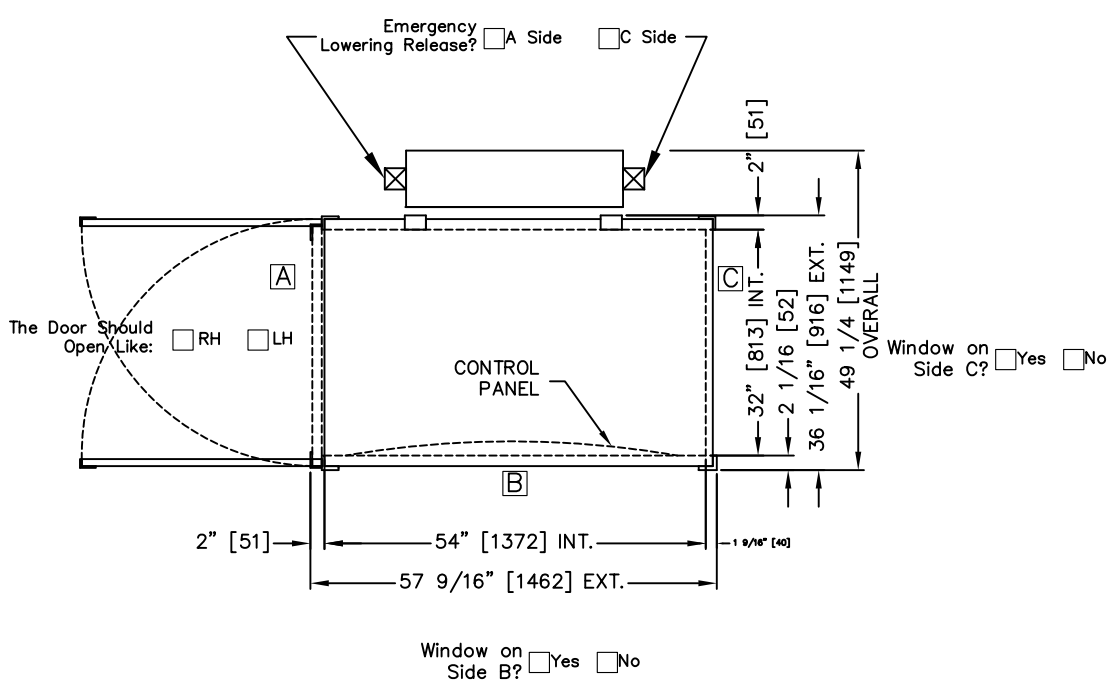

TOP VIEW TYPE–1L

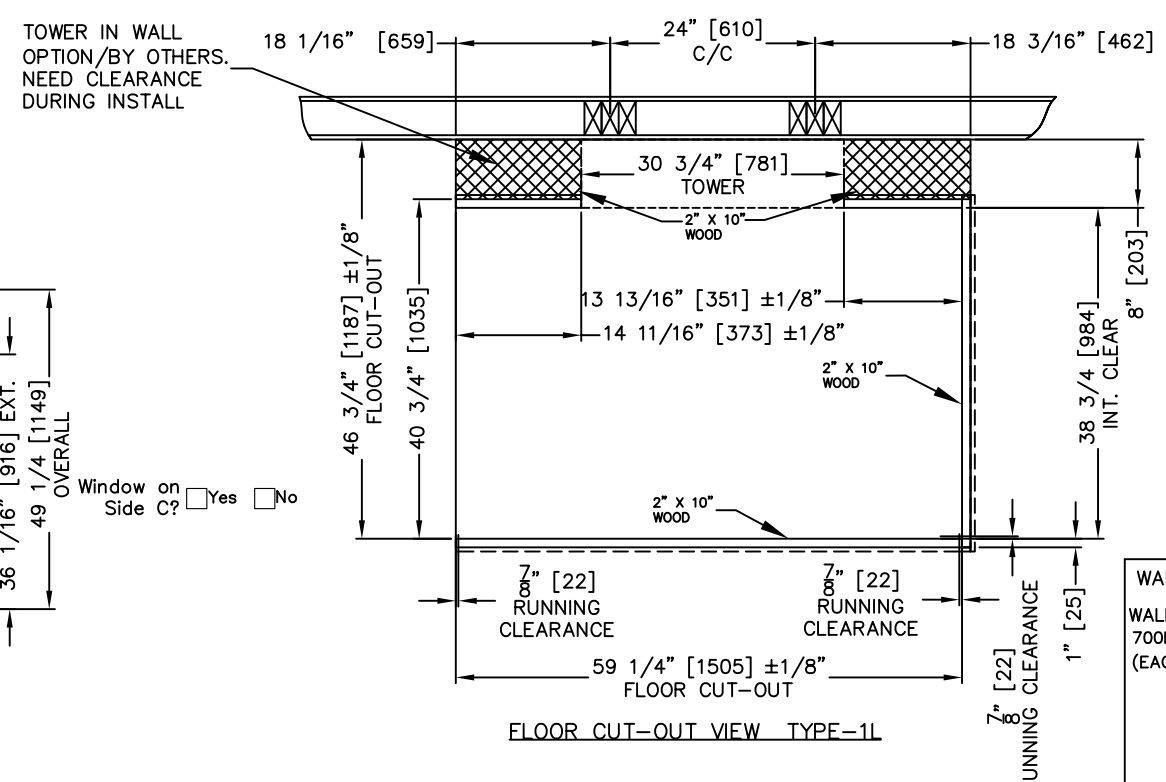

FLOOR CUT–OUT VIEW TYPE–1L

DOOR SWING

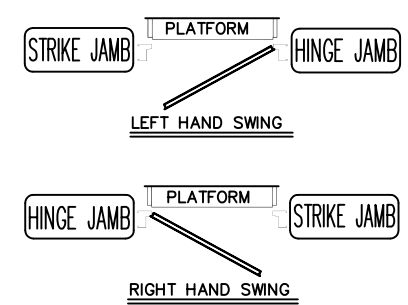

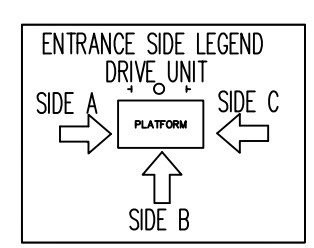

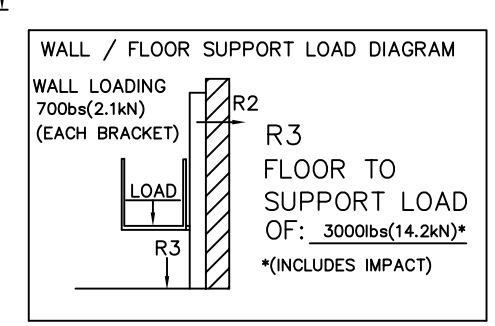

FORCES

CUSTOMER :			
PROJECT :			
DATE :			
PROJECTION	TOLERANCES IF NOT SPECIFIED FRAC: ±1/8" [3]		
SCALE: NTS	DRAWN BY:	savaria™	
DATE:			
DRAWING #	REV#	PAGE:	TITRE: